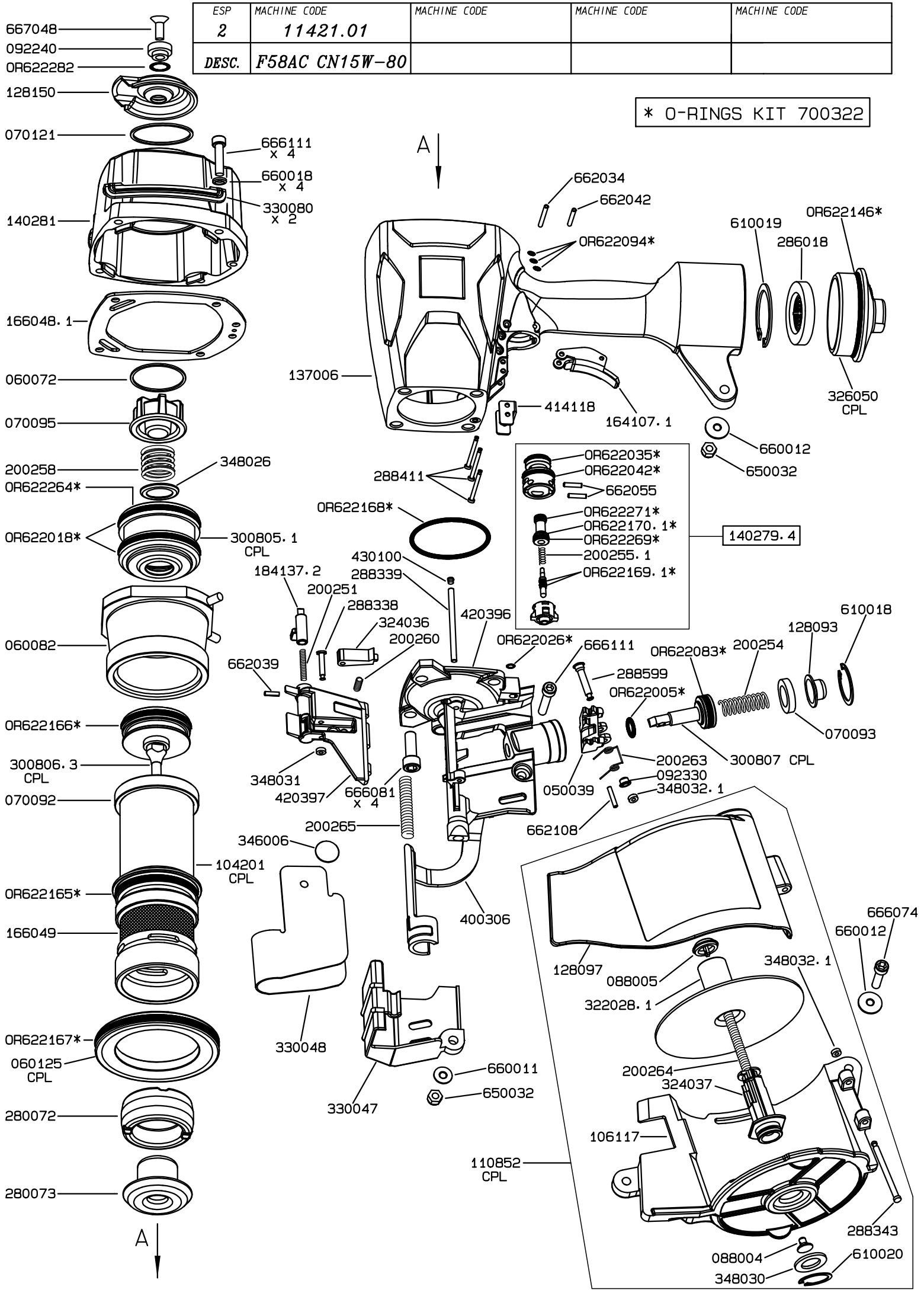ESP	MACHINE CODE	MACHINE CODE	MACHINE CODE	MACHINE CODE
2	11421.01			
DESC.	F58AC CN15W-80